# DUHS HOSPITAL DISPOSAL UNIT: G22027R

G22027R | 2000100408

ARTICLE GROUP : **G22027 ++** | ARTICLE FAMILY : **Slop hopper** | PRODUCT GROUP : **Hospital equipment**

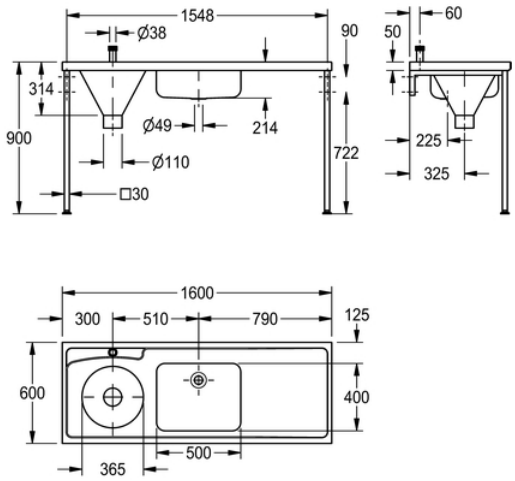


A DUHS hospital disposal unit manufactured from 1.2mm thick, grade 1.4301 (304) stainless steel with a satin polish finish. The top is turned down on all four edges and incorporates a wet area recess. Fitted with a sluice hopper at one end supplied with a top inlet. The hopper has a 110mm dia. outlet which can accept a P or S trap, available as an extra. A wash up bowl is positioned next to the sluice hopper and is prepared for a 38 mm waste outlet. The wash up bowl does not have an overflow, flush grated wastes are available as an extra, Stainless steel cisterns are available with stainless steel downpipes or plastic cisterns with plastic downpipes are available. Plastic cisterns have a 9 litre capacity whereas the stainless steel cistern can be 6, 7 or 9 litre capacity and all are fitted with a 13mm HP brass valve, plastic float and CP metal flushing lever handles. The unit should only be fed from a cistern or tank water supply. L or R after the code number refers to the handing of the drainer ie. left or right when facing front of unit.
Unit can be mounted on either stainless steel cantilever brackets or stainless steel front leg supports. Front leg supports give a working height of 900mm and have adjustable feet which can be screwed to the floor for extra stability.

HTM 64 Standard

Right hand drainer, no tapholes

| TECHNICAL DATA | |
|---|---|
| bowl - bowl depth | 200.00 mm |
| bowl finish | satin finished |
| bowl - depth | 400.00 mm |
| bowl - width | 500.00 mm |
| drainer position | right |
| drainer or storage | drainer |
| gross weight | 18.10 kg |
| material | stainless steel |
| material code | 1.4301 Chrome Nickel steel V2A |
| material thickness | 1.20 mm |
| minimum flushing capacity | 6.00 liter |
| net weight | 16.90 kg |
| outlet size | DN 100 |
| overall depth | 600.00 mm |

| | |
|---|---|
| overall height | 300.00 mm |
| overall width | 1,600.00 mm |
| overflow | no |
| surface finish | satin finished |
| tap ledge | no |
| type of mounting | wall and floor mounting |
| waste hole position | centre back |
| waste hole projection | 225.00 mm |
| waste size | DN 32 |

# DUHS HOSPITAL DISPOSAL UNIT: G22027R

G22027R | 2000100408

ARTICLE GROUP : **G22027 ++** | ARTICLE FAMILY : **Slop hopper** | PRODUCT GROUP : **Hospital equipment**

## ACCESSORY

**TAP: F1074**

2000100426

**TAP: F1075**

2000100427