For more information on Ideal-Standard visit www.barbourproductsearch.info

washbasins

white 40 vessel

Modern circular vessel basin with deep fascia for mounting on countertop.

- *Distinctive design*
- *Domestic or hotel bathrooms*
- *Part of extensive suite*

Illustrated

E000601 White 40cm diameter vessel basin, no tapholes
E0069AA Silver single lever monoblock vessel basin mixer, no waste in Chrome
S8734AA 1¼in swivel plug waste
E009567 Fixing bracket

Material

Vitreous china

Weight

washbasin 8.5kg

Colours

White only

Standards

Vitreous china to BS 3402

Special notes

For fixing on 36mm maximum thickness countertops with special fixing bracket provided, joint sealed with waterproof sealant (not provided)

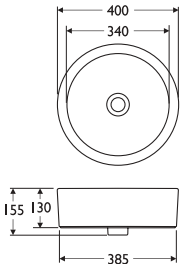

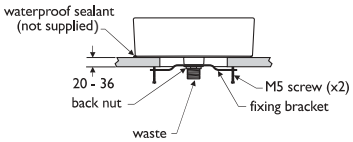

price 4

Product information
Tel: 0870 122 8822 Fax: 0870 122 8282
eMail: info@thebluebook.co.uk

Ideal Standard

For more information on Ideal-Standard visit www.barbourproductsearch.info

washbasins

white 40

Modern round fronted handrinse basin with deep fascia for wall mounting Can also be mounted on full pedestal.

- *Distinctive design*
- *Domestic or hotel bathrooms*
- *2 taphole variants*
- *Wall or pedestal fixing*

Illustrated

E001701 White 40cm washbasin, single central taphole
E0065AA Silver dual control monoblock basin mixer in Chrome with 1¼in pop up waste
E0079AA Contemporary 1¼in bottle trap in Chrome
E007067 washbasin wall fixing set

Material

Vitreous china

Weight

washbasin 9.0kg
Full-pedestal 6.8kg

Colours

White only

Standards

Vitreous china to BS 3402

Options

E001801 White 50cm washbasin with 2 tapholes
E001501 Full pedestal

Special notes

Washbasin wall mounted using E007067 wall fixing set or full pedestal mounted using No.12 fixing screws(not supplied)

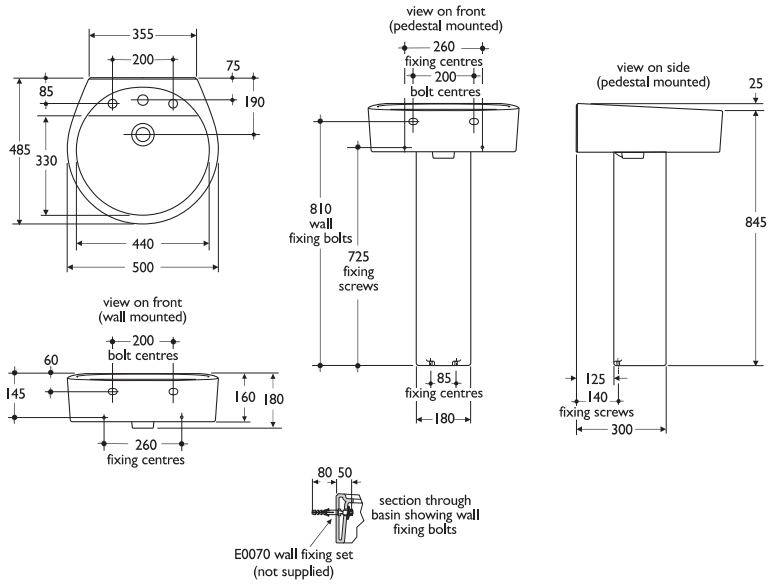

price 4

Product information
Tel: 0870 122 8822 Fax: 0870 122 8282
eMail: info@thebluebook.co.uk

Ideal Standard

For more information on Ideal-Standard visit www.barbourproductsearch.info

washbasins

white 45 back outlet

Modern round fronted basin with deep fascia for use with ducted services. Incorporates concealed back outlet with plastic strainer.

- *Design for duct services*
- *Commercial and hotel use*
- *Concealed back outlet*

Illustrated

E001301 White 45cm washbasin, back outlet, no tapholes
E009167 1¼in outlet adapter with removable plastic strainer
E0063AA Silver 3 hole concealed wall basin mixer with 150mm projection spout
E006267 Washbasin bolt set for panel fixing

Material

Vitreous china

Weight

washbasin 11.5kg

Colours

White only

Standards

Vitreous china to BS 3402

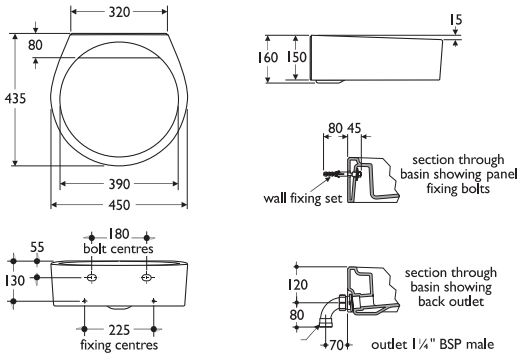

price 4

Product information
Tel: 0870 122 8822 Fax: 0870 122 8282
eMail: info@thebluebook.co.uk

Ideal Standard

For more information on Ideal-Standard visit www.barbourproductsearch.info

washbasins

white 45 semi-countertop

Modern round fronted semi-countertop basin with deep fascia for use in fitted furniture and countertops.

- *Distinctive design*
- *Domestic or hotel bathrooms*
- *Part of extensive suite*

Illustrated

E001401 White 45cm washbasin, single central taphole
E0067AA Silver single lever monoblock basin mixer in Chrome with 1¼in pop up waste

Material

Vitreous china

Weight

washbasin 11.5kg

Colours

White only

Standards

Vitreous china to BS 3402

Special notes

For fixing to square edged countertops with securing clips provided, joint sealed with waterproof sealant (not provided)

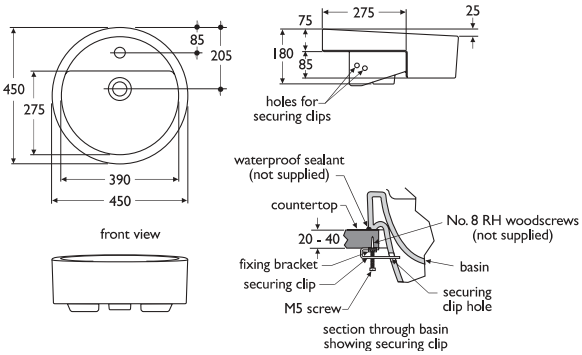

price 4

Product information
Tel: 0870 122 8822 Fax: 0870 122 8282
eMail: info@thebluebook.co.uk

Ideal Standard

For more information on Ideal-Standard visit www.barbourproductsearch.info

washbasins

white 50

Modern round fronted basin with deep fascia for pedestal mounting Can also be wall mounted on rawl bolts.

- *Distinctive design*
- *Domestic or hotel bathrooms*
- *3 taphole variants*
- *Pedestal or wall fixing*

Illustrated

E000701 White 50cm washbasin, single central taphole
E001501 Full pedestal
E0067AA Silver single lever monoblock basin mixer in Chrome with 1¹/₄in pop up waste

Material

Vitreous china

Weight

washbasin 12.5kg
Full -pedestal 6.8kg

Colours

White only

Standards

Vitreous china to BS 3402

Options

E000801 White 50cm washbasin with 2 tapholes
E002601 White 50cm basin, 2 tapholes, no chainstay hole
E000901 White 50cm washbasin with 3 tapholes
E007067 washbasin wall fixing set

Special notes

Washbasin wall mounted using E007067 wall fixing set or full pedestal mounted using No.12 fixing screws(not supplied)

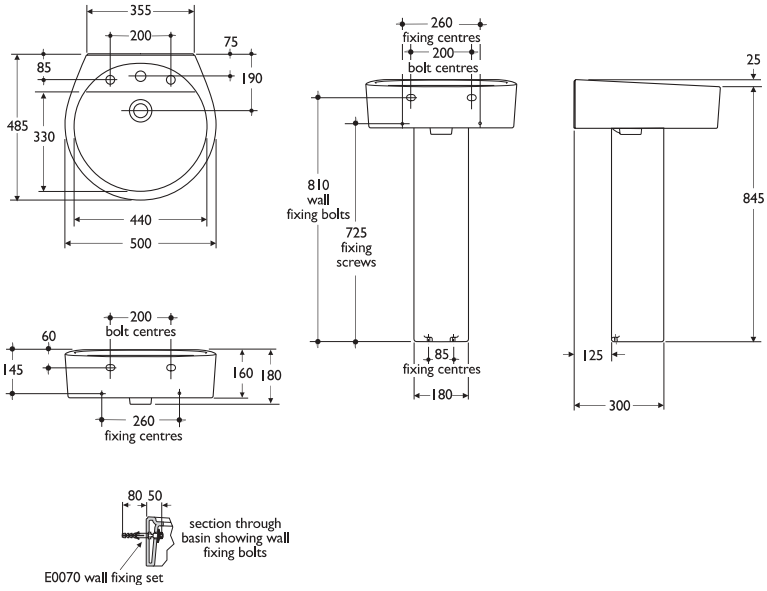

price 4

For more information on Ideal-Standard visit www.barbourproductsearch.info

WCs

white wm

Wall mounted WC washdown pan with box flushing rim, Push button dual flush cistern and design matched seat. Concealed fixings.

- *Domestic or hotel bathrooms*
- *Part of complete suite*
- *Push button dual flush concealed cistern*

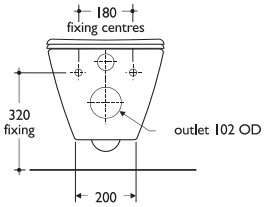

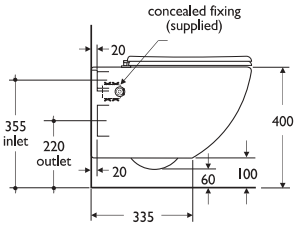

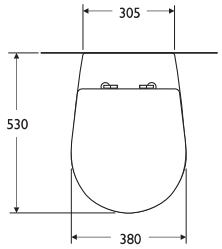

Illustrated

E000501 White wall mounted WC pan with horizontal outlet
E006067 pair support brackets for 28mm to 225mm wall thickness
S362467 Conceala 2 duct cistern and cover, 6 litre, dual flush pneumatic valve, top inlet ballvalve and internal overflow
S4339AA Pneumatic dual flush flushing plate in Chrome
E002101 White plastic seat & cover

Material

Vitreous china

Weight

WC pan 16.0kg
Cistern 4.0kg
Seat & cover 2.6kg

Colours

Available in White only

Standards

Vitreous china to BS 3402

Options

E929367 In wall WC frame 820mm high for top operation
E929167 In wall WC frame 880mm high for top operation
E929267 In wall WC frame 880mm high for front operation
E4434AA Dual flush flushing plate
E929767 In wall WC frame 1100mm high for front operation
E4433AA Dual flush flushing plate
E002201 White plastic seat only

Special notes

Support brackets screwed to floor within the duct, WC fitted to support brackets with bolts supplied and bolts screwed back to wall with brackets. Joint sealed with waterproof sealant (not supplied). Alternative in wall systems incorporate support bolts eliminating requirement for separate support brackets.

price 4

For more information on Ideal-Standard visit www.barbourproductsearch.info

WCs

white cc

Close coupled WC suite comprising washdown pan with box flushing rim, design matched push button cistern and seat.

- *Domestic or hotel bathrooms*
- *Part of complete suite*
- *Push button dual flush cistern*

Illustrated

E000101 White floor standing WC pan with horizontal outlet and fixing bracket
E000201 White push button dual flush valve cistern, 6 litre, bottom supply and internal overflow
E002101 White plastic seat & cover

Material

Vitreous china

Weight

WC pan 19.5kg
Cistern 14.0kg
Seat & cover 2.6kg

Colours

Available in White only

Standards

Vitreous china to BS 3402

Options

E002201 White plastic seat only

Associated products

Panekta Connectors
E3222 converts to P trap
E3221 converts to S or turned P trap

Special notes

WC secured to floor with fixing bracketd and cistern screwed to wall

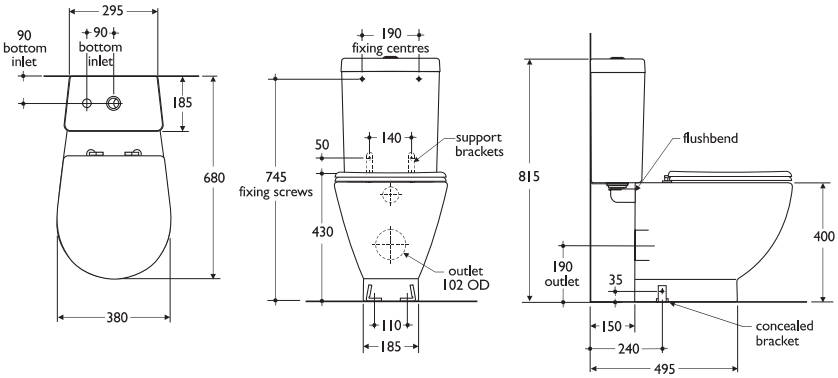

Product information
Tel: 0870 122 8822 Fax: 0870 122 8282
eMail: info@thebluebook.co.uk

For more information on Ideal-Standard visit www.barbourproductsearch.info

WCs

white btw

Back-to-wall WC unit washdown pan with box flushing rim, Push button dual flush cistern and design matched seat.

- *Domestic or hotel bathrooms*
- *Part of complete suite*
- *Push button dual flush cistern*

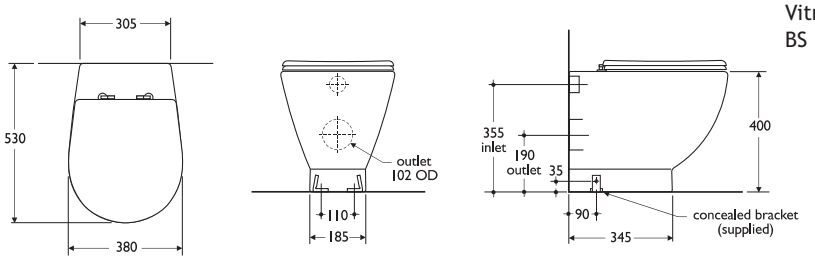

Illustrated

E000101 White floor standing WC pan with horizontal outlet and fixing bracket
S362467 Conceala 2 duct cistern and cover, 6 litre, dual flush pneumatic valve, top inlet ballvalve and internal overflow
S4339AA Pneumatic dual flush flushing plate in Chrome
E002101 White plastic seat & cover

Material

Vitreous china

Weight

WC pan 19.5kg
Cistern 4.0kg
Seat & cover 2.6kg

Colours

Available in White only

Standards

Vitreous china to BS 3402

Options

E002201 White plastic seat only

Associated products

Panekta Connectors
E3222 converts to P trap
E3221 converts to S or turned P trap

Special notes

WC secured to floor and joint to wall sealed with waterproof sealant(not supplied)

price 4

For more information on Ideal-Standard visit www.barbourproductsearch.info

IDEAL-STANDARD

baths

white

Idealcast™ 170 x 80 cm bath without handgrips.

- *Hotel or domestic use*
- *Part of matching suite*
- *Encapsulated baseboard*

rectangular

baths

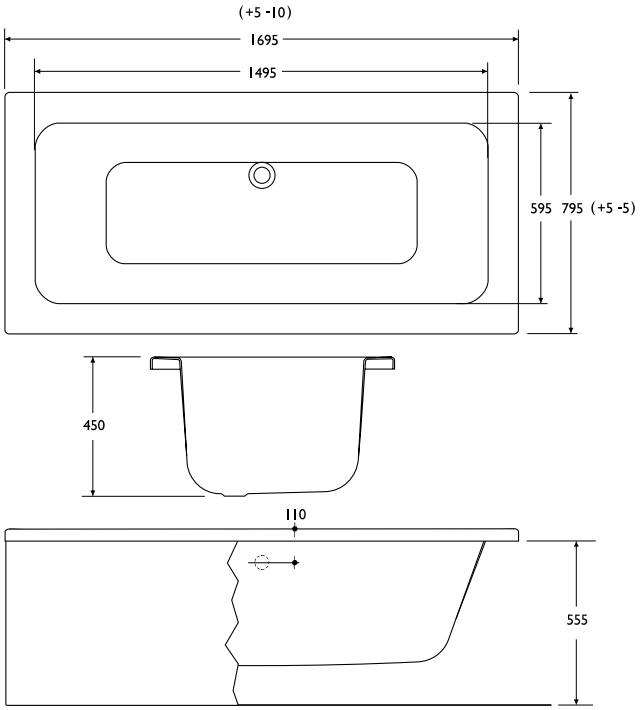

Illustrated

E002301 White bath,170x80cm, no tapholes, no handgrips
E0071AA Silver wall mounted bath mixer with 180mm nozzle in Chrome
E5975AA 1½in combined bath pop up waste and overflow in Chrome with
E5800AA operating handle and plug cover
E002401 White front panel
E002501 White end panel

Material

Idealcast™

Weight

Bath 40.0kg

Colours

Available in White only

Standards

BS 4305 (EN 198)

Special notes

Supported on steel cradle with adjustable feet. Brackets provided for securing to wall

price 4

Product information
Tel: 0870 122 8822 Fax: 0870 122 8282
eMail: info@thebluebook.co.uk

Ideal Standard

For more information on Ideal-Standard visit www.barbourproductsearch.info

brassware

silver

Silver lever action mixers are designed for ease of operation making them appropriate for universal access applications.

Valves incorporate ceramic disc cartridges and are supplied complete with matching chrome plated brass handles.

Suitable for low or high pressure systems with balanced or unbalanced supplies.

When fittings are installed on unbalanced pressures it may be necessary to restrict the inlet with the higher pressure to prevent excessive flow. Check valves must be fitted on mixers where supplied are unbalanced.

- *Distinctive design*
- *Supplied complete with brass handles*
- *Ceramic disc cartridge*
- *Quarter turn for ease of use*

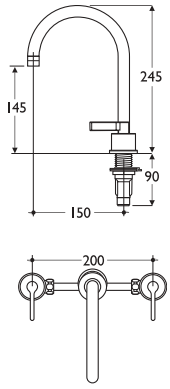

- *3 hole basin mixer*
- *Quarter turn*

Illustrated
E0061AA Silver ½in quarter turn 3 hole basin mixer with pop up waste in Chrome

Options
E0062AA Silver ½in quarter turn 3 hole basin mixer, no waste in Chrome

Special notes
Inlets ½in BSP male coned for 15mm copper
20mm diameter hole required for spout
30mm diameter hole required for side valves

price 4

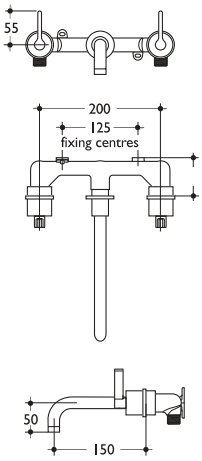

- *Wall basin mixer 150mm*
- *Quarter turn*

Illustrated
E0063AA Silver ½in quarter turn wall basin mixer with 150mm projection spout in Chrome

Special notes
Inlets ½in BSP male coned for 15mm copper

price 4

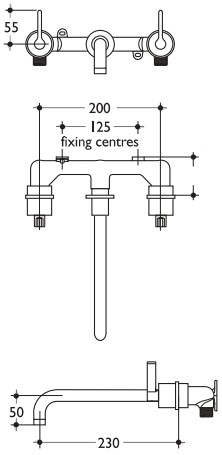

- *Wall basin mixer 230mm*
- *Quarter turn*

Illustrated
E0064AA Silver ½in quarter turn wall basin mixer with 230mm projection spout in Chrome

Special notes
Inlets ½in BSP male coned for 15mm copper

price 4

contract

brassware

Product information
Tel: 0870 122 8822 Fax: 0870 122 8282
eMail: info@thebluebook.co.uk

Ideal Standard

For more information on Ideal-Standard visit www.barbourproductsearch.info

brassware

silver

Silver lever action mixers are designed for ease of operation making them appropriate for universal access applications.

Valves incorporate ceramic disc cartridges and are supplied complete with matching chrome plated brass handles.

Suitable for balanced or unbalanced supplies.

When fittings are installed on unbalanced pressures it may be necessary to restrict the inlet with the higher pressure to prevent excessive flow. Check valves must be fitted on mixers where supplied are unbalanced

- *Distinctive design*
- *Supplied complete with brass handles*
- *Ceramic disc cartridge*
- *Quarter turn for ease of use*

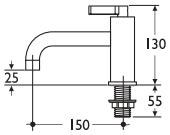

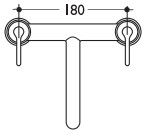

- *Pillar mixer*
- *Quarter turn*

Illustrated
E0072AA Silver 3/4in quarter turn pillar 2 hole bath mixer in Chrome

Special notes
Inlets 3/4in BSP male
30mm diameter holes required
Suitable for high or low pressure systems

price 4

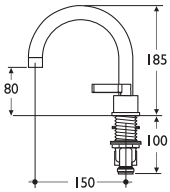

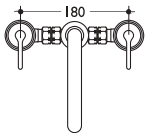

- *Deck mounted mixer*
- *Quarter turn*

Illustrated
E0070AA Silver 3/4in quarter turn deck mounted 3 hole bath mixer in Chrome

Special notes
Inlets 3/4in BSP male
30mm diameter hole required for spout
38mm diameter holes required for side valves
Suitable for high or low pressure systems

price 4

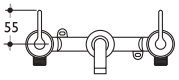

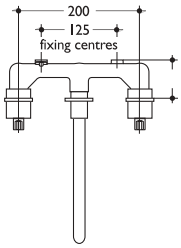

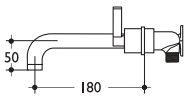

- *Wall mounted bath mixer*
- *Quarter turn*

Illustrated
E0071AA Silver 3/4in quarter turn wall mounted 3 hole bath mixer , 180mm projection nozzle, in Chrome

Special notes
Inlets 1/2in BSP male
Suitable for high pressure systems only

price 4

contract

brassware

Product information
Tel: 0870 122 8822 Fax: 0870 122 8282
eMail: info@thebluebook.co.uk

Ideal Standard

For more information on Ideal-Standard visit www.barbourproductsearch.info

brassware

silver

Silver lever action mixers are designed for ease of operation making them appropriate for universal access applications.

Valves incorporate ceramic disc cartridges and are supplied complete with matching chrome plated brass handles.

Suitable for low or high pressure systems with balanced or unbalanced supplies.

When fittings are installed on unbalanced pressures it may be necessary to restrict the inlet with the higher pressure to prevent excessive flow. Check valves must be fitted on mixers where supplied are unbalanced.

- *Distinctive design*
- *Supplied complete with brass handles*
- *Ceramic disc cartridge*
- *Quarter turn for ease of use*

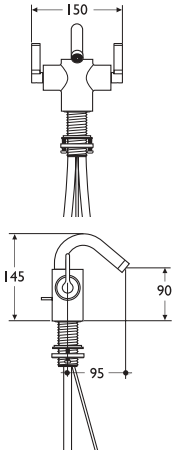

- *Dual control bidet mixer*
- *Quarter turn*

Illustrated
E0073AA Silver ½in quarter turn dual control bidet mixer with pop up waste in Chrome

Special notes
Inlets with connectors for 15mm copper
35mm diameter hole required

price 4

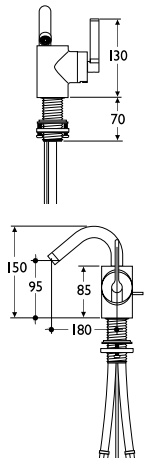

- *Single lever bidet mixer*
- *Quarter turn*

Illustrated
E0074AA Silver ½in quarter turn single lever bidet mixer with pop up waste in Chrome

Special notes
Inlets with connectors for 15mm copper
35mm diameter hole required

price 4

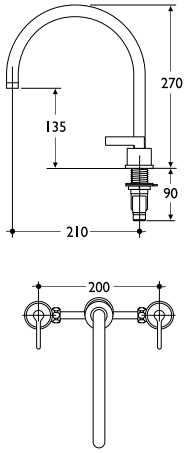

- *Deck mounted sink mixer*
- *Quarter turn*

Illustrated
E0078AA Silver ½in quarter turn deck mounted 3 hole sink mixer in Chrome

Special notes
Inlets ½in BSP male
20mm diameter hole required for spout
30mm diameter hole required for side valves

price 4

contract

brassware

Product information
Tel: 0870 122 8822 Fax: 0870 122 8282
eMail: info@thebluebook.co.uk

Ideal Standard

For more information on Ideal-Standard visit www.barbourproductsearch.info

brassware

silver

Silver lever action mixers are designed for ease of operation making them appropriate for universal access applications.

Valves incorporate ceramic disc cartridges and are supplied complete with matching chrome plated brass handles.

Suitable for low or high pressure systems with balanced or unbalanced supplies.

When fittings are installed on unbalanced pressures it may be necessary to restrict the inlet with the higher pressure to prevent excessive flow. Check valves must be fitted on mixers where supplied are unbalanced.

- *Distinctive design*
- *Supplied complete with brass handles*
- *Ceramic disc cartridge*
- *Quarter turn for ease of use*

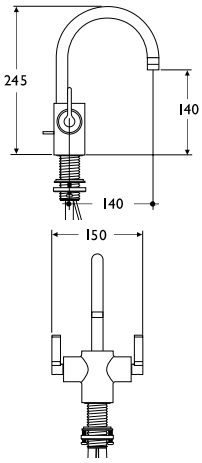

- *Dual control basin monoblock*
- *Quarter turn*

Illustrated
E0065AA Silver 1/2in quarter turn dual control basin monoblock mixer with pop up wastein Chrome

Options
E0066AA Silver 1/2in quarter turn dual control basin monoblock mixer, no waste in Chrome

Special notes
Inlets supplied with connectors for 15mm copper, 35mm diameter hole required

price 4

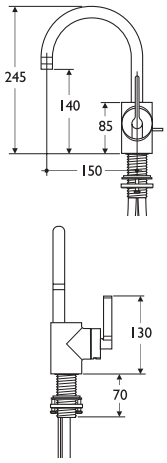

- *Single lever basin monoblock*
- *Quarter turn*

Illustrated
E0067AA Silver 1/2in quarter turn single lever basin monoblock mixer with pop up waste in Chrome

Options
E0068AA Silver 1/2in quarter turn single lever basin monoblock mixer, no waste in Chrome

Special notes
Inlets supplied with connectors for 15mm copper, 35mm diameter hole required

price 4

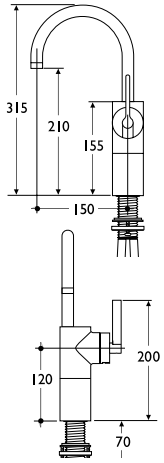

- *Single lever vessel basin monoblock*
- *Quarter turn*

Illustrated
E0069AA Silver 1/2in quarter turn single lever vessel basin monoblock mixer, no waste in Chrome

Special notes
Inlets supplied with connectors for 15mm copper, 35mm diameter hole required

price 4

contract

brassware

Product information
Tel: 0870 122 8822 Fax: 0870 122 8282
eMail: info@thebluebook.co.uk

Ideal Standard