WCA0200 (ZIPX®Sky)

Manufacturer

Wilms NV – Molsebaan 20 – 2450 Meerhout – Belgium
Tel. : +32 (0)14.36.99.70 – FAX. : +32 (0)14.30.96.47 – wilms@wilms.be – www.wilms.be

Discription

WCA0200 (ZIPX®Sky) is a windproof sun protection. This sun protection can be used for horizontal as well a for vertical purposes.
This makes the screen wind proof in any position. A special gas tension system, in combination with inox cables, assures that the fabric stays tense in any inclination. The gas tension springs put are under pressure by the manufacturer.

The box is self supporting, the feet on the bottom of the box ends slide in the side channels. The box is 120 mm x 120 mm and is in 2 parts. A top box and a removable under part, the under part is always in 45°. All profiles and spare part that are visible are composed in aluminum and can be powder coated in a RAL color of choice.

The solar protection can be installed by using distance supports or can be installed, if necessary with an intermediate tube, directly on the glasshouse profiles. The inclination can be between 5° and 90°. A bottom up installation is also a possibility but only with interior use.

The maximum dimensions of the WCA0200 (ZIPX®Sky) are
4.000 mm x 3.000 mm
3.000 mm x 6.000 mm

The minimum dimensions are 820 mm x 700 mm

Control can be manual by means of bar control or electric by a tubular motor (230V). The motor will be attached with a special developed motor support which must not be screwed.. This makes reparations and replacements very easy.

Fabric

The fabric retains its form between -35°C and + 50°C and is water proof. Moreover, it protects your interior against UV rays, cold and heat. The fabric can be rolled up when it is wet. The fabric is resistant to heat. The % of transmitted solar energy depends of the color and the type of fabric.
Standard, a serge fabric is provided, but other types of fabric are also possible. The fabrics have the following features.

Soltis 92

Polyester 100 % * Fire level M1 * Thickness 0.45 mm * Weight 420 g/m^2

Soltis B92N (Black out)

Polyester 100% * Fire level M2 * Thickness 0.60 mm * Weight 650 g/m^2

Drawings

Box (120 mm x 120 mm)

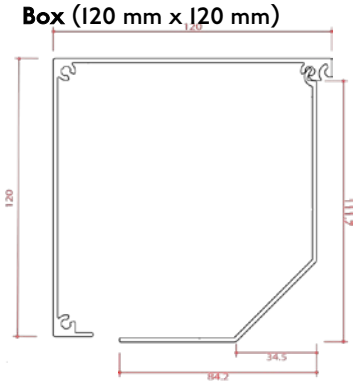

Conductor (49 mm x 85 mm)

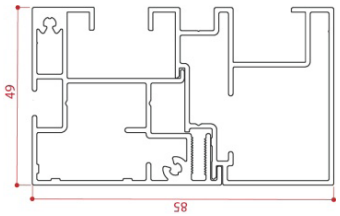

End slat (72,5 mm x 80 mm)

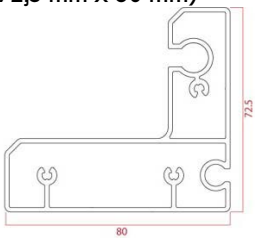

Installation possibilities

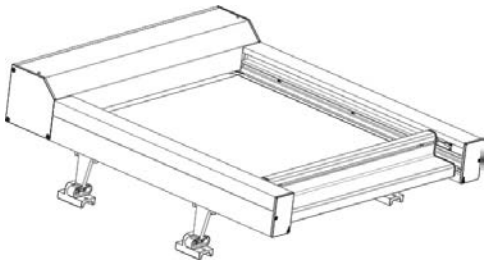

With support

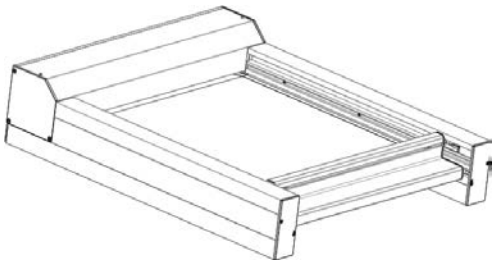

Without support

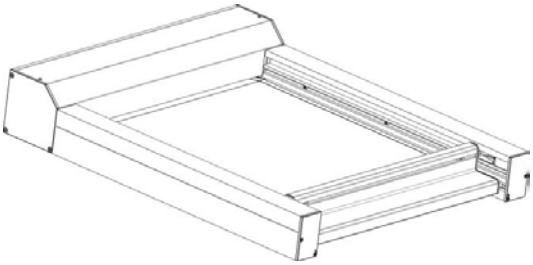

Direct

Molsebaan 20 | B-2450 Meerhout | Tel. +32 14 36 99 70 | Fax +32 14 30 96 47 | E-mail wilms@wilms.be
www.wilms.be