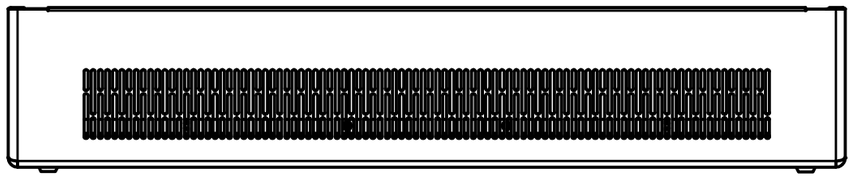

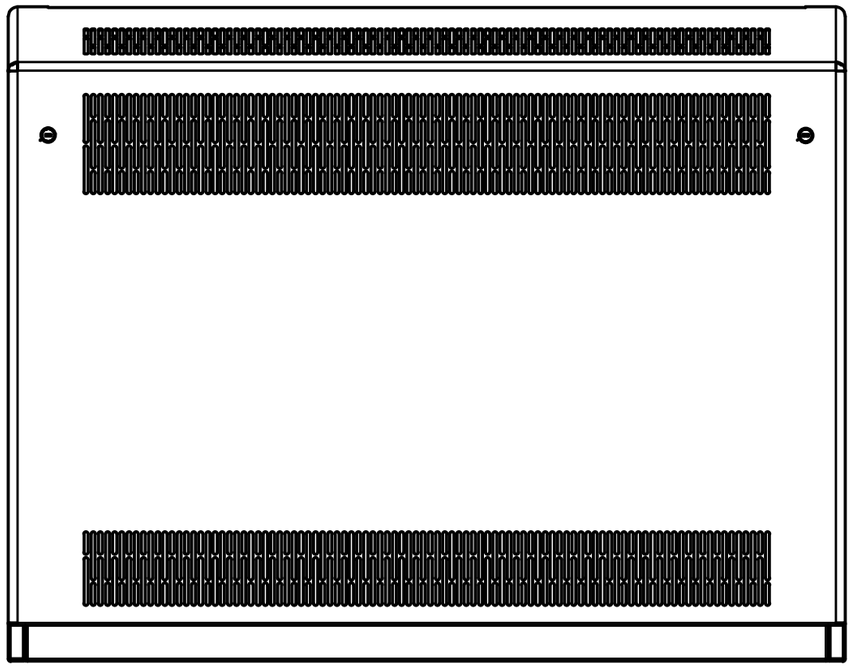

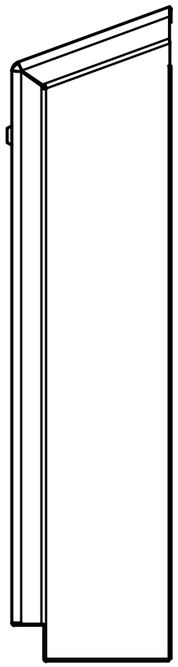

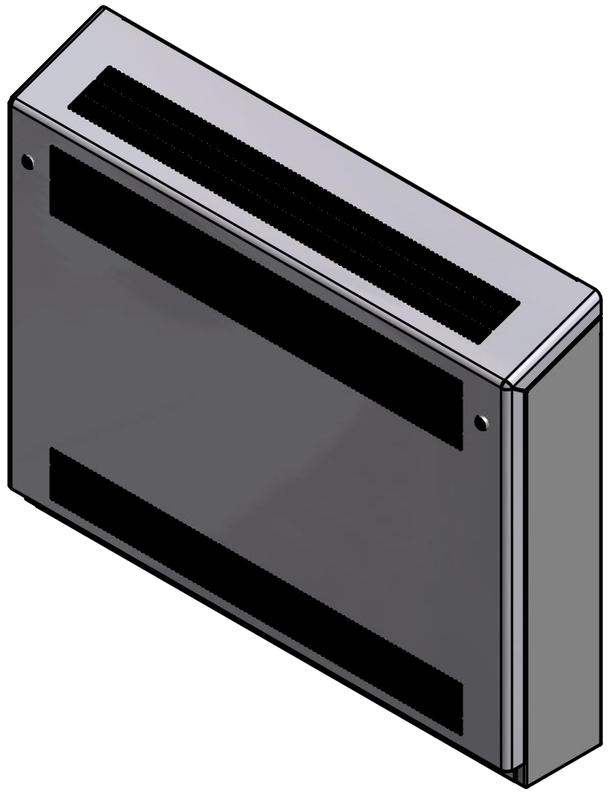

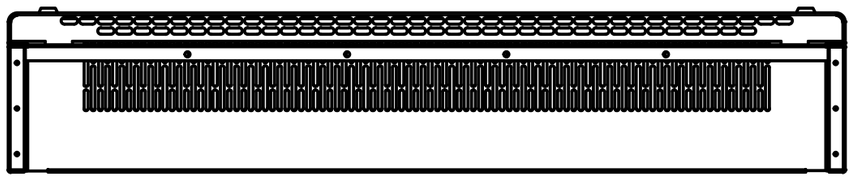

Type:
DeepClean Radiator Guard

Model:
Sloping Top - Floor Mounted

Manufacture:
1.5mm Mild Steel
10mm Radius Corners
Full Height Front Access Door
Patented Open Hinge Door (Pat. No. 2 410 544)
5.5mm Punched Grill
Cut-Outs Programmed into Manufacture
28mm Valve Knockouts Available

Sizes:
Single Casing Length 600mm - 2000mm
Single Casing Height 650mm - 1000mm
Bespoke Solutions Available

Finish:
Polyester PowderCoated RAL 9003
Patented BioCote® Anti-Microbial Agent

Valve Options:
Internal TRV Kit 9210-13
External TRV Kit 9231-41
Remote Sensing TRV Kit 7463-41
Anti-Ligature TRV Kit & Shroud 9213-63
"RotaRad" Rotating Valve Kit

Fixings:
All Fixings Internal
6mm Allen Key Door Locks
(Security Locks Also Available)

Contour Casings
Stafford Park 12
Telford
TF3 3BJ
Tel: 01952 290498
Email: Sales@contourcasings.co.uk
Web: www.contourcasings.co.uk

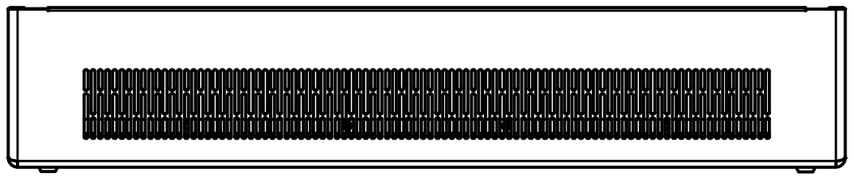

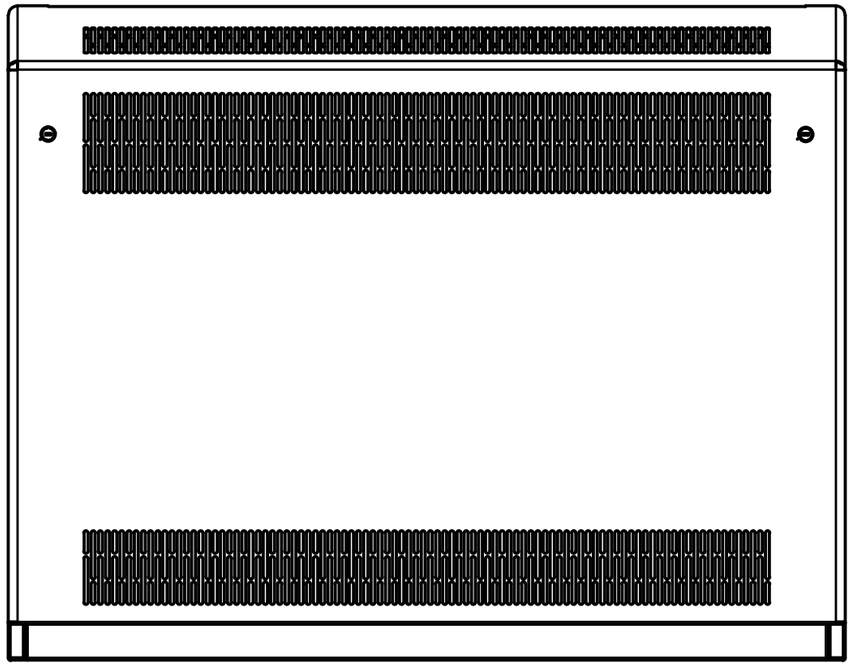

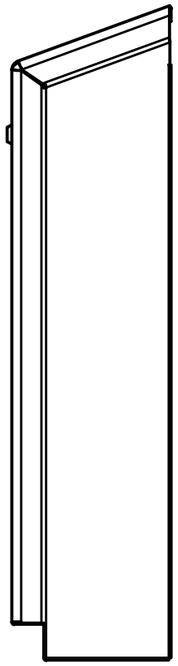

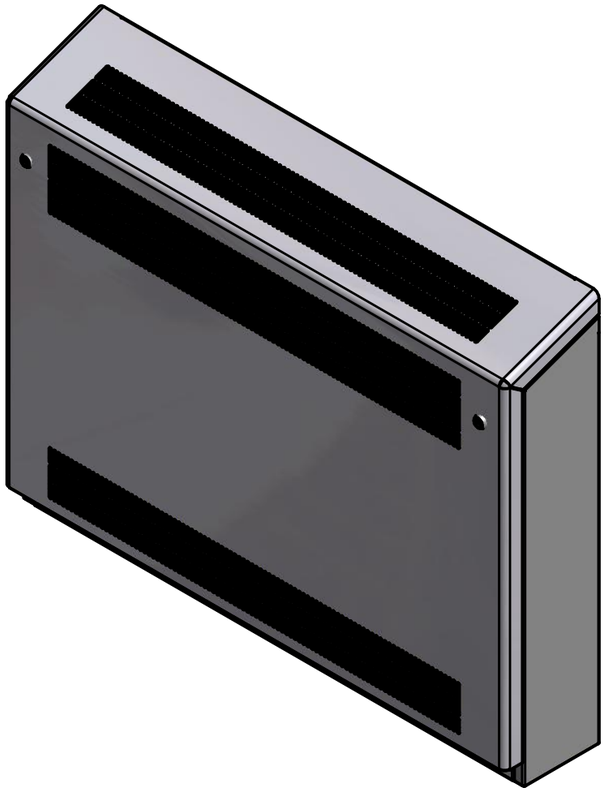

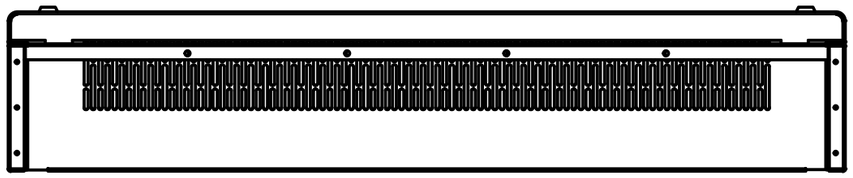

Type:
DeepClean Radiator Guard Anti-Ligature

Model:
Sloping Top - Floor Mounted

Manufacture:
1.5mm Mild Steel
10mm Radius Corners
Full Height Front Access Door
Patented Open Hinge Door (Pat. No. 2 410 544)
5.5mm Punched Grill
Bi-Directional Anti-Ligature Weave Covers All Apertures
Cut-Outs Programmed into Manufacture
28mm Valve Knockouts Available

Sizes:
Single Casing Length 600mm - 2000mm
Single Casing Height 650mm - 1000mm
Bespoke Solutions Available

Finish:
Polyester PowderCoated RAL 9003
Patented BioCote® Anti-Microbial Agent

Valve Options:
Internal TRV Kit 9210-13
External TRV Kit 9231-41
Remote Sensing TRV Kit 7463-41
Anti-Ligature TRV Kit & Shroud 9213-63
"RotaRad" Rotating Valve Kit

Fixings:
All Fixings Internal
8mm PinHex Door Locks
(Other Locks Also Available)

Contour Casings
Stafford Park 12
Telford
TF3 3BJ
Tel: 01952 290498
Email: Sales@contourcasings.co.uk
Web: www.contourcasings.co.uk

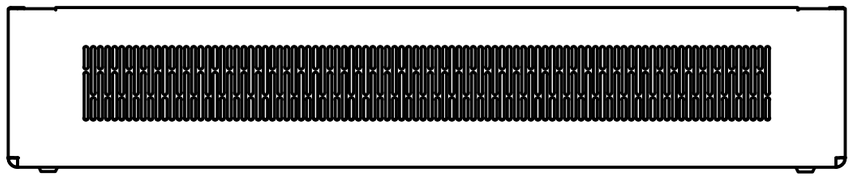

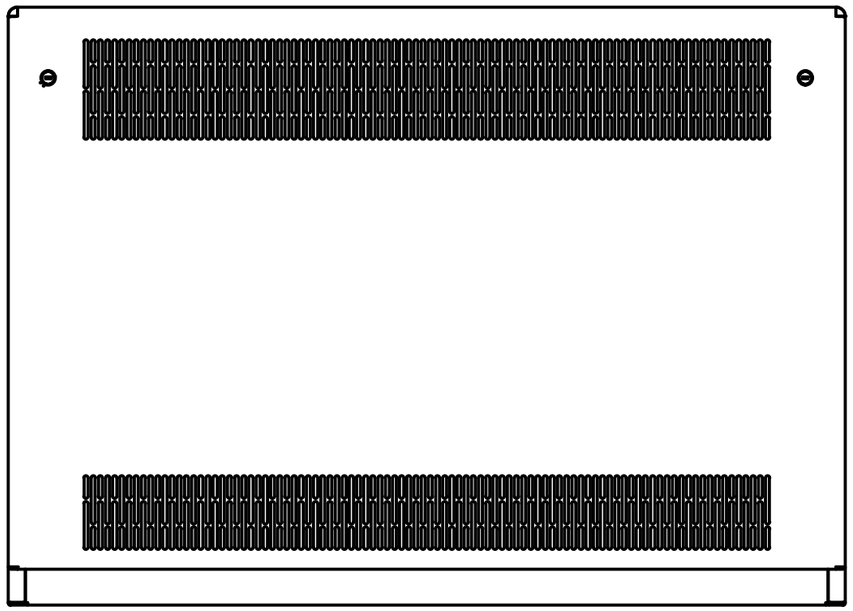

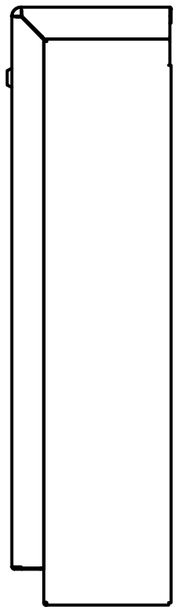

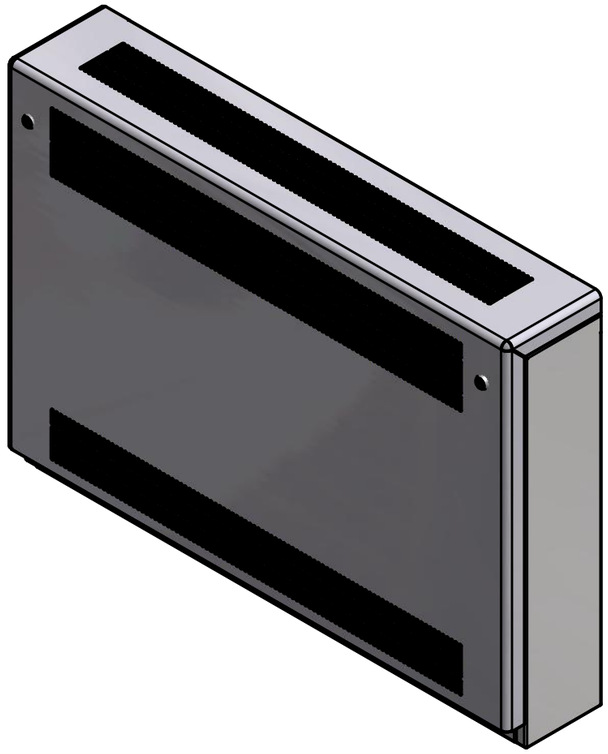

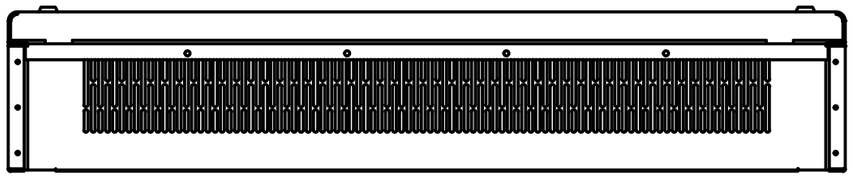

Type:
DeepClean Radiator Guard Anti-Ligature

Model:
Square Top - Floor Mounted

Manufacture:
1.5mm Mild Steel
10mm Radius Corners
Full Height Front Access Door
Patented Open Hinge Door (Pat. No. 2 410 544)
5.5mm Punched Grill
Bi-Directional Anti-Ligature Weave Covers All Apertures
Cut-Outs Programmed into Manufacture
28mm Valve Knockouts Available

Sizes:
Single Casing Length 600mm - 2000mm
Single Casing Height 650mm - 1000mm
Bespoke Solutions Available

Finish:
Polyester PowderCoated RAL 9003
Patented BioCote® Anti-Microbial Agent

Valve Options:
Internal TRV Kit 9210-13
External TRV Kit 9231-41
Remote Sensing TRV Kit 7463-41
Anti-Ligature TRV Kit & Shroud 9213-63
"RotaRad" Rotating Valve Kit

Fixings:
All Fixings Internal
8mm PinHex Door Locks
(Other Locks Also Available)

Contour Casings
Stafford Park 12
Telford
TF3 3BJ
Tel: 01952 290498
Email: Sales@contourcasings.co.uk
Web: www.contourcasings.co.uk

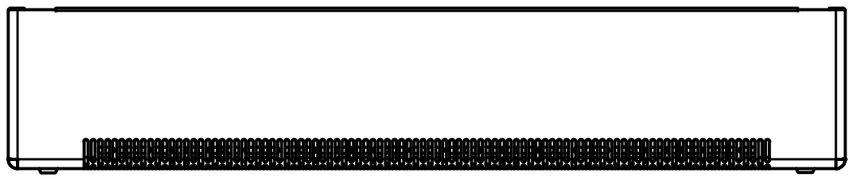

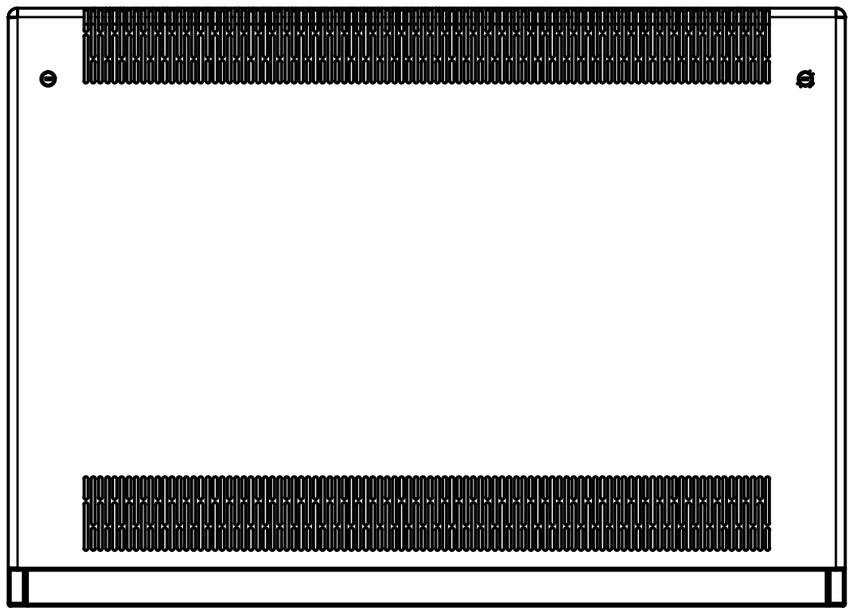

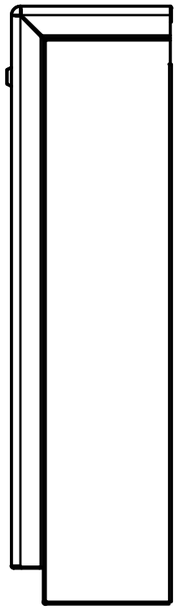

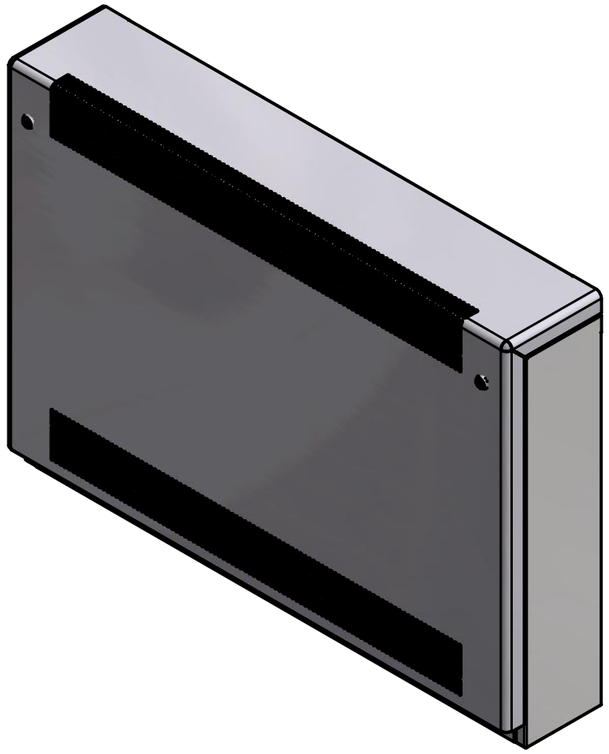

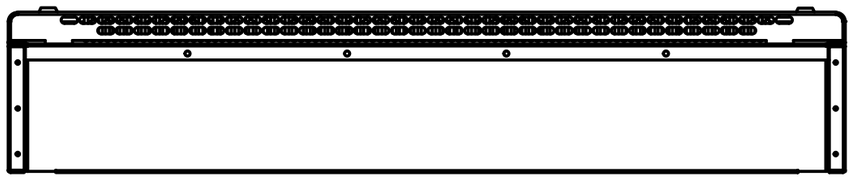

Type:
DeepClean Radiator Guard

Model:
Square Top - Floor Mounted

Manufacture:
1.5mm Mild Steel
10mm Radius Corners
Full Height Front Access Door
Patented Open Hinge Door (Pat. No. 2 410 544)
5.5mm Punched Grill
Cut-Outs Programmed into Manufacture
28mm Valve Knockouts Available

Sizes:
Single Casing Length 600mm - 2000mm
Single Casing Height 650mm - 1000mm
Bespoke Solutions Available

Finish:
Polyester PowderCoated RAL 9003
Patented BioCote® Anti-Microbial Agent

Valve Options:
Internal TRV Kit 9210-13
External TRV Kit 9231-41
Remote Sensing TRV Kit 7463-41
Anti-Ligature TRV Kit & Shroud 9213-63
"RotaRad" Rotating Valve Kit

Fixings:
All Fixings Internal
6mm Allen Key Door Locks
(Security Locks Also Available)

Contour Casings
Stafford Park 12
Telford
TF3 3BJ
Tel: 01952 290498
Email: Sales@contourcasings.co.uk
Web: www.contourcasings.co.uk

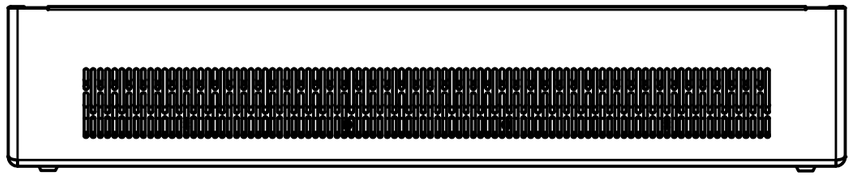

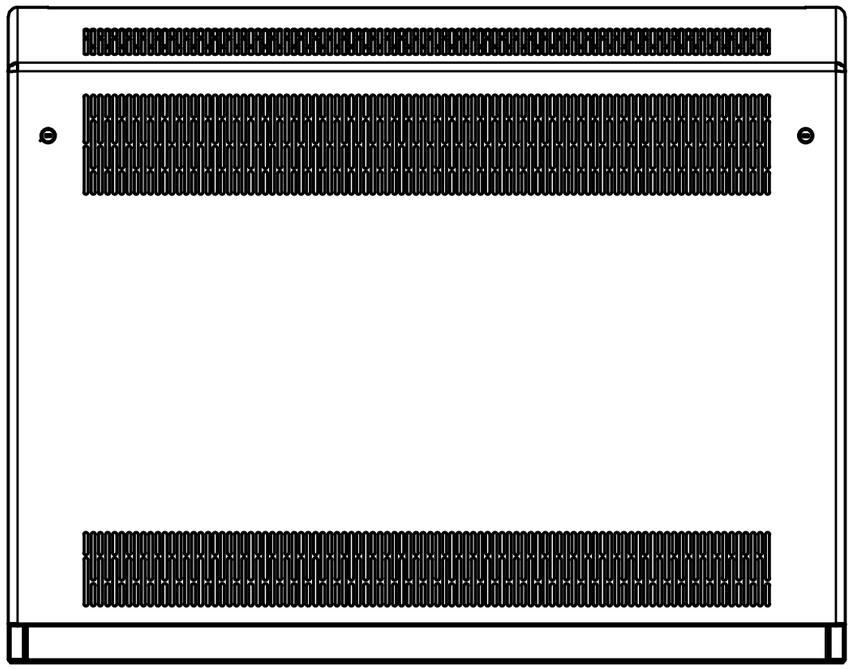

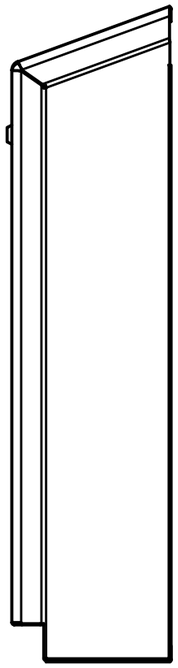

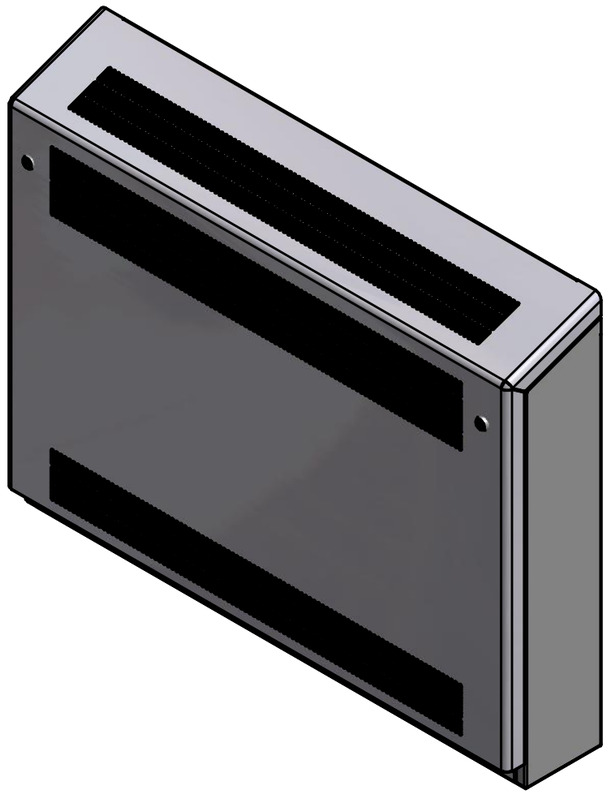

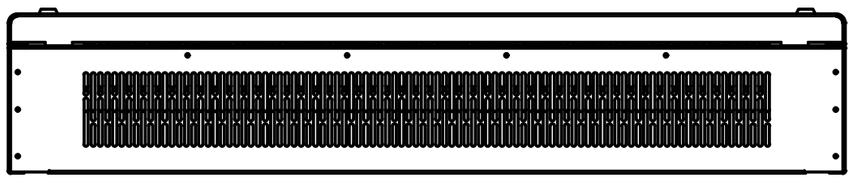

Type:
DeepClean Radiator Guard Anti-Ligature

Model:
Sloping Top - Wall Mounted

Manufacture:
1.5mm Mild Steel
10mm Radius Corners
Full Height Front Access Door
Patented Open Hinge Door (Pat. No. 2 410 544)
5.5mm Punched Grill
Base Plate with Grill
Bi-Directional Anti-Ligature Weave Covers All Apertures
Cut-Outs Programmed into Manufacture
28mm Valve Knockouts Available

Sizes:
Single Casing Length 600mm - 2000mm
Single Casing Height 650mm - 1000mm
Bespoke Solutions Available

Finish:
Polyester PowderCoated RAL 9003
Patented BioCote® Anti-Microbial Agent

Valve Options:
Internal TRV Kit 9210-13
External TRV Kit 9231-41
Remote Sensing TRV Kit 7463-41
Anti-Ligature TRV Kit & Shroud 9213-63
"RotaRad" Rotating Valve Kit

Fixings:
All Fixings Internal
8mm PinHex Door Locks
(Other Locks Also Available)

Contour Casings
Stafford Park 12
Telford
TF3 3BJ
Tel: 01952 290498
Email: Sales@contourcasings.co.uk
Web: www.contourcasings.co.uk

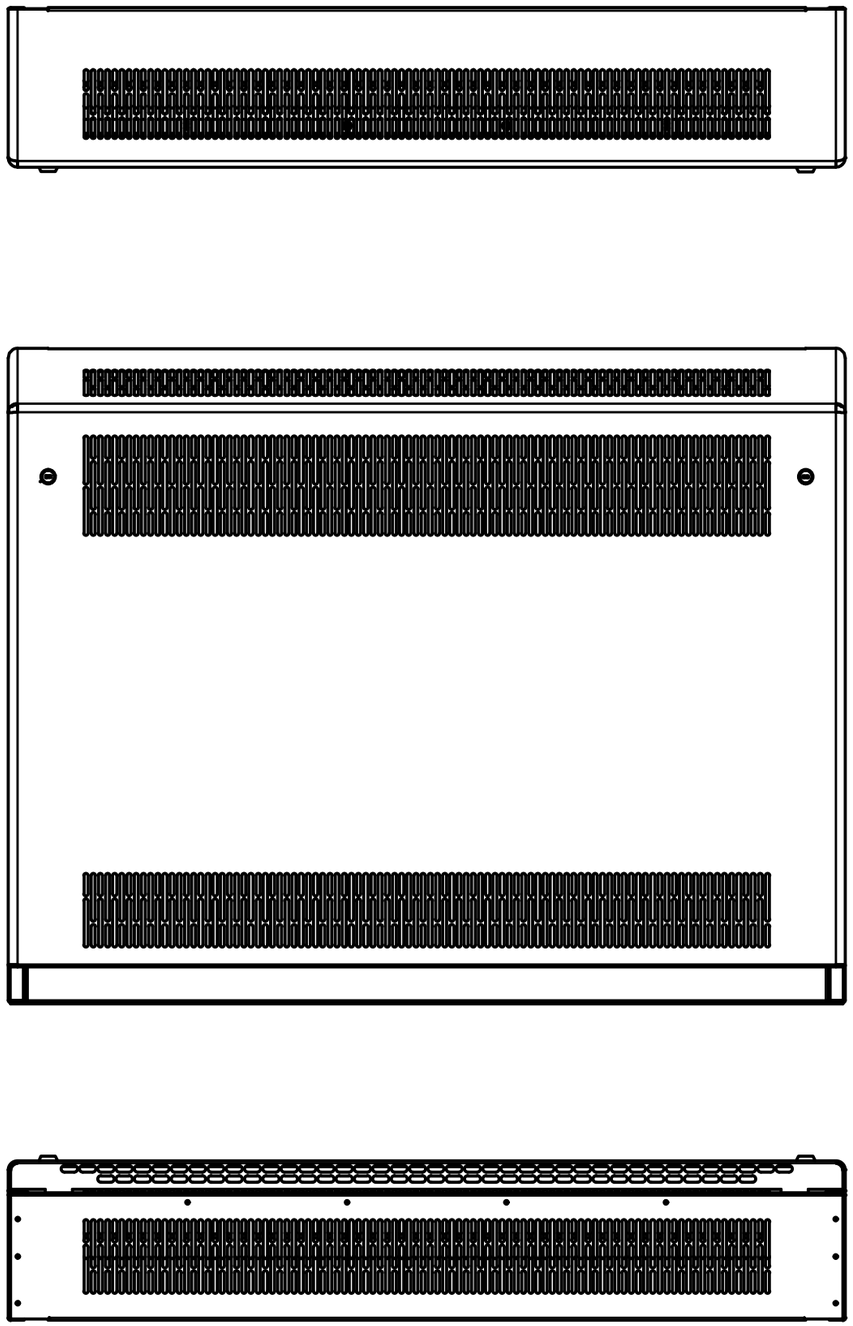

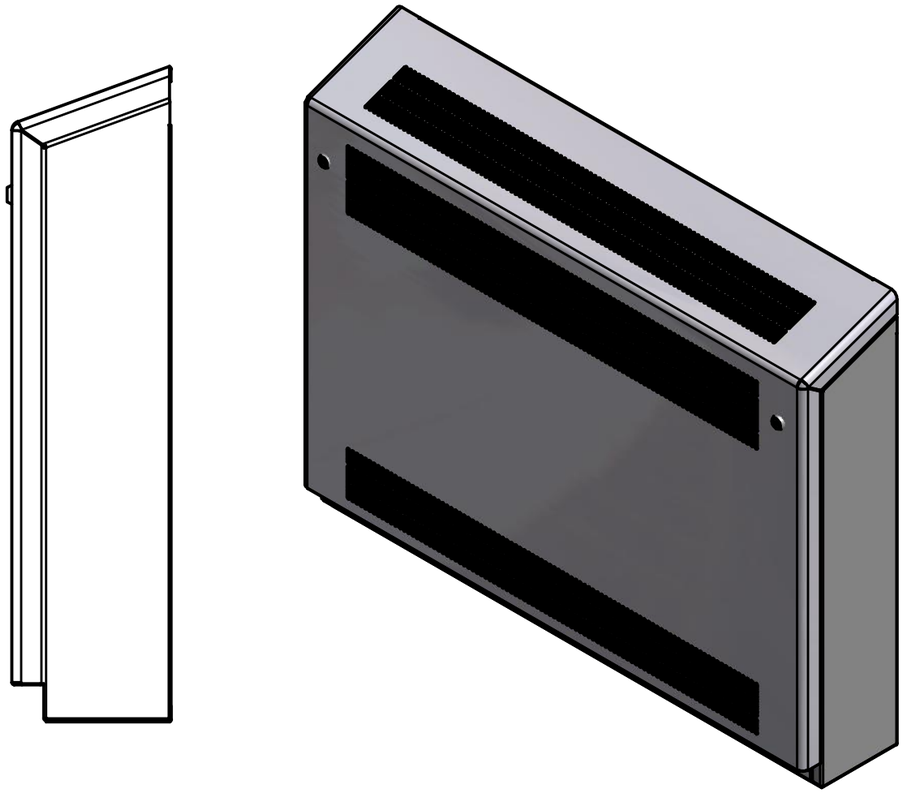

Type:
DeepClean Radiator Guard

Model:
Sloping Top - Wall Mounted

Manufacture:
1.5mm Mild Steel
10mm Radius Corners
Full Height Front Access Door
Patented Open Hinge Door (Pat. No. 2 410 544)
5.5mm Punched Grill
Base Plate with Grill
Cut-Outs Programmed into Manufacture
28mm Valve Knockouts Available

Sizes:
Single Casing Length 600mm - 2000mm
Single Casing Height 650mm - 1000mm
Bespoke Solutions Available

Finish:
Polyester PowderCoated RAL 9003
Patented BioCote® Anti-Microbial Agent

Valve Options:
Internal TRV Kit 9210-13
External TRV Kit 9231-41
Remote Sensing TRV Kit 7463-41
Anti-Ligature TRV Kit & Shroud 9213-63
"RotaRad" Rotating Valve Kit

Fixings:
All Fixings Internal
6mm Allen Key Door Locks
(Security Locks Also Available)

Contour Casings
Stafford Park 12
Telford
TF3 3BJ
Tel: 01952 290498
Email: Sales@contourcasings.co.uk
Web: www.contourcasings.co.uk

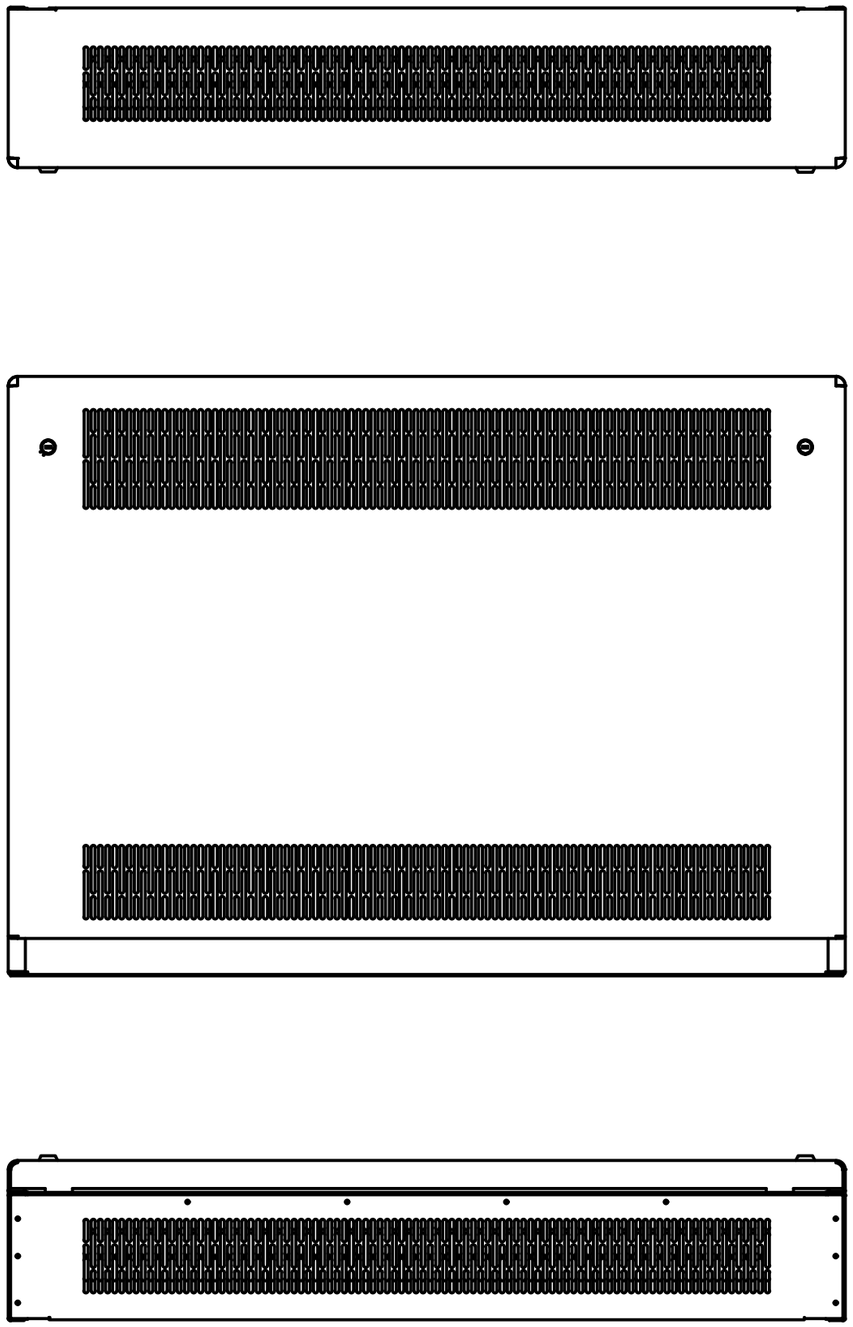

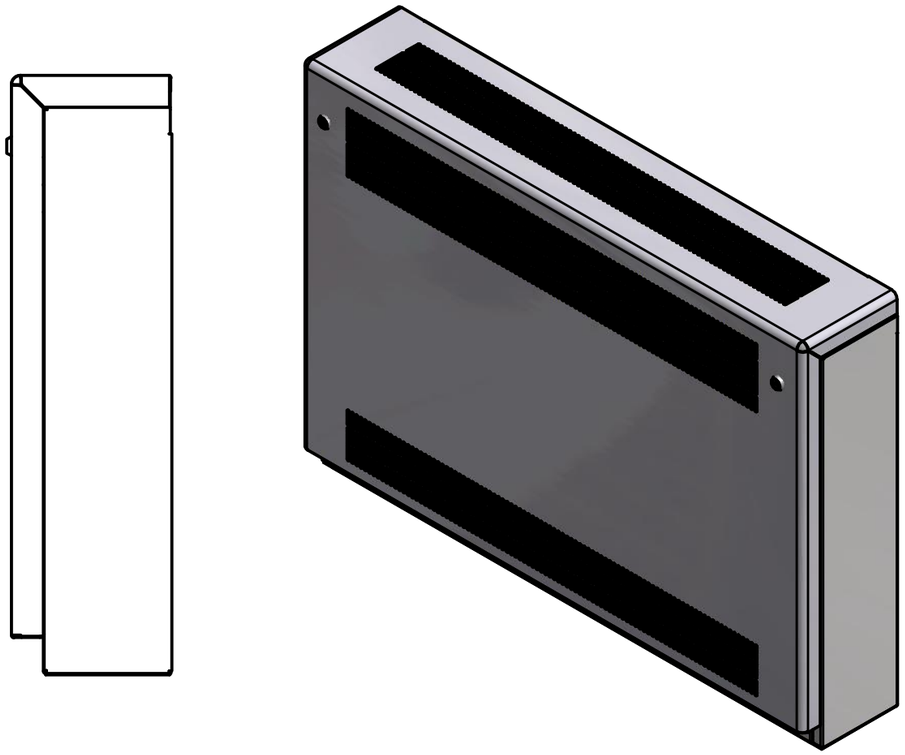

Type:
DeepClean Radiator Guard Anti-Ligature

Model:
Square Top - Wall Mounted

Manufacture:
1.5mm Mild Steel
10mm Radius Corners
Full Height Front Access Door
Patented Open Hinge Door (Pat. No. 2 410 544)
5.5mm Punched Grill
Base Plate with Grill
Bi-Directional Anti-Ligature Weave Covers All Apertures
Cut-Outs Programmed into Manufacture
28mm Valve Knockouts Available

Sizes:
Single Casing Length 600mm - 2000mm
Single Casing Height 650mm - 1000mm
Bespoke Solutions Available

Finish:
Polyester PowderCoated RAL 9003
Patented BioCote® Anti-Microbial Agent

Valve Options:
Internal TRV Kit 9210-13
External TRV Kit 9231-41
Remote Sensing TRV Kit 7463-41
Anti-Ligature TRV Kit & Shroud 9213-63
"RotaRad" Rotating Valve Kit

Fixings:
All Fixings Internal
8mm PinHex Door Locks
(Other Locks Also Available)

Contour Casings
Stafford Park 12
Telford
TF3 3BJ
Tel: 01952 290498
Email: Sales@contourcasings.co.uk
Web: www.contourcasings.co.uk

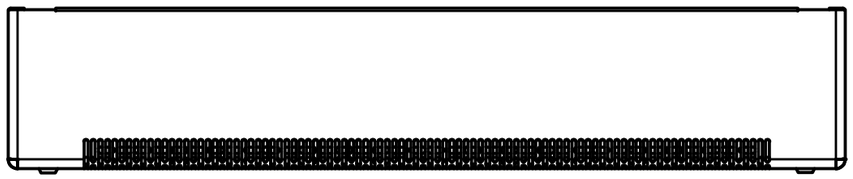

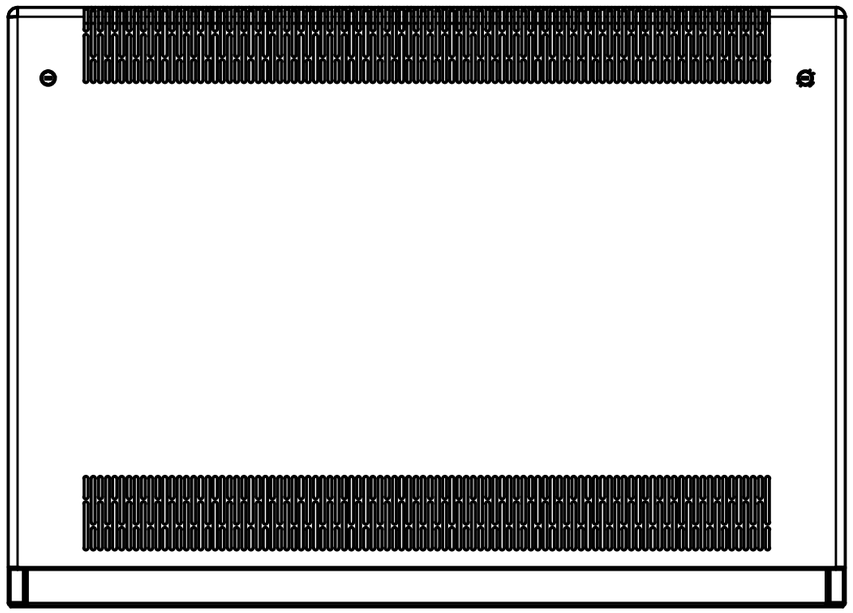

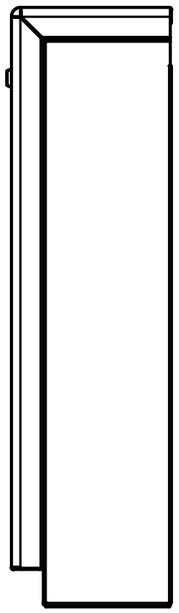

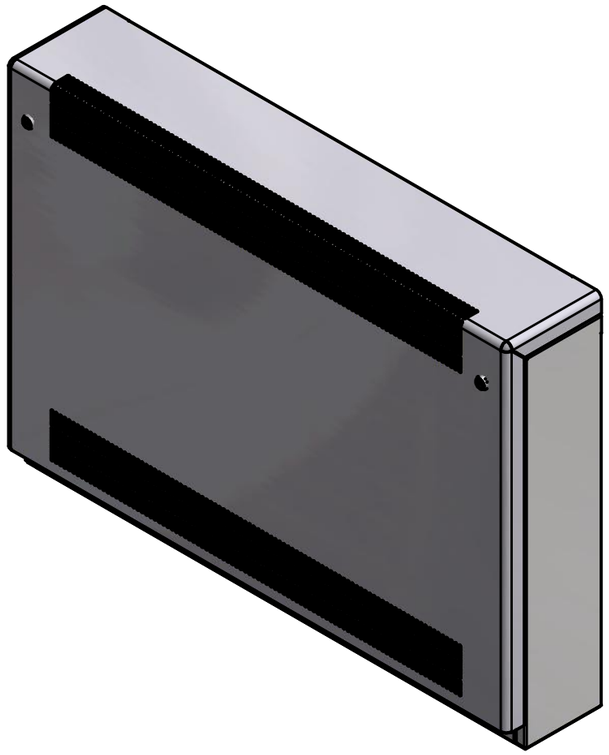

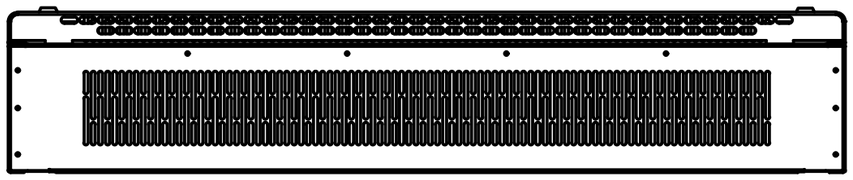

Type:
DeepClean Radiator Guard

Model:
Square Top - Wall Mounted

Manufacture:
1.5mm Mild Steel
10mm Radius Corners
Full Height Front Access Door
Patented Open Hinge Door (Pat. No. 2 410 544)
5.5mm Punched Grill
Base Plate with Grill
Cut-Outs Programmed into Manufacture
28mm Valve Knockouts Available

Sizes:
Single Casing Length 600mm - 2000mm
Single Casing Height 650mm - 1000mm
Bespoke Solutions Available

Finish:
Polyester PowderCoated RAL 9003
Patented BioCote® Anti-Microbial Agent

Valve Options:
Internal TRV Kit 9210-13
External TRV Kit 9231-41
Remote Sensing TRV Kit 7463-41
Anti-Ligature TRV Kit & Shroud 9213-63
"RotaRad" Rotating Valve Kit

Fixings:
All Fixings Internal
6mm Allen Key Door Locks
(Security Locks Also Available)

Contour Casings
Stafford Park 12
Telford
TF3 3BJ
Tel: 01952 290498
Email: Sales@contourcasings.co.uk
Web: www.contourcasings.co.uk